Supplementary Material

Ablation of PRMT6 reveals a role as a negative transcriptional regulator of the p53 tumor suppressor

Mathieu Neault[‡], Frédérick A. Mallette[‡], Gillian Vogel, Jonathan Michaud-Levesque and Stéphane Richard[*]

Terry Fox Molecular Oncology Group and the Bloomfield Center for Research on Aging, Segal Cancer Centre, Lady Davis Institute for Medical Research, Sir Mortimer B. Davis Jewish General Hospital, and Departments of Oncology and Medicine, McGill University, Montréal, Québec, Canada, H3T 1E2.

[‡] These authors contributed equally

This file includes Supplementary Table I and Supplementary Figures S1-S3.

Supplementary Table I. List of primers used for qPCR and RT-qPCR.

Primer name	5' to 3' sequence	Assay
p53-1062F	GATAGGCTCTCCGCATCCTC	qPCR
p53-1062R	AGGCCCAGAGTTCAGACTACAA	qPCR
p53-1322F	CCTCCGACGTCTTCATTCTG	qPCR
p53-1322R	TGGGAACGGTAATGCACTCT	qPCR
p53-1873F	AACTCGGACCAGGAACCACT	qPCR
p53-1873R	ACCCACGTTTGCTGTTTCTC	qPCR
p53-2508F	AAGCTCGTGCAGAGAGTGGT	qPCR
p53-2508R	GAGGTTGGTTCTCTGCCTCA	qPCR
p53-2809F	TGACGCATGGACACACAGTT	qPCR
p53-2809R	CCGAAATGGTAAGGGTAGGG	qPCR
p53-3419F	ACCAGGTCATCCTCAAACTCC	qPCR
p53-3419R	CCGTTTGCTCTCTCCCTCTT	qPCR
PAI-1-F	AGCGGCACAGTGGCGTCTTC	RT-PCR
PAI-1-R	ATTGTCTCTGTCGGGTTGTGCCG	RT-PCR
GADD45a-F	CCGAGGGAGGGACTCGCACT	RT-PCR
GADD45a-R	CGCCCACCGTGTCCATCCTTT	RT-PCR
Mdm2-F	CGCGGGAAGTAGCAGCCGTC	RT-PCR
Mdm2-R	CGCAGGAGAAGCGCGGTGAT	RT-PCR
PML-F	AGTGCCTGGAGCACACCCTGT	RT-PCR
PML-R	AAGCCTCCTCTCTGTAGGTGGGG	RT-PCR
p21-F	GCAGCCGAGAGGTGTGAGCC	RT-PCR
p21-R	GGACATGGTGCCTGTGGCTCTG	RT-PCR
p53-F	AGGGCTCACTCCAGCCTCCAG	RT-PCR
p53-R	GGGAGCTAGCAGTTTGGGCTTTCC	RT-PCR
PRMT6-F	AGTCCATGCTGAGCTCCGT	RT-PCR
PRMT6-R	TCCATGCAGCTCATATCCA	RT-PCR
GAPDH-F	CACCACCAACTGCTTAGCC	RT-PCR
GAPDH-R	GTCTTCTGGGTGGCAGTGAT	RT-PCR

SUPPLEMENTARY FIGURE LEGENDS

Supplementary Figure S1. Generation of PRMT6 knock out mouse.

(A) Schematic representation of the construct used for the generation of the *PRMT6* null allele in mice. The initial targeting configuration shows the single *PRMT6* exon 1 with LoxP sequences (white triangles). The allele *PRMT6*^{fl} denotes the deletion of the pGK Neo^{r} Poly A cassette using Flp recombinase which removes everything between the FRT sites (black triangles). *PRMT6*$^{-}$ denotes the allele where the *PRMT6* exon 1 is deleted between LoxP sites. The small arrows labelled 1-5 denote primers used to confirm the genotype. **(B)** DNA isolated from pGK-PRMT6, WTgDNA, PRMT6$^{+/Tg}$ was analyzed by PCR using the primer pair indicated (panel A) to verify homologous recombination. DNA fragments were visualized on a 0.8% agarose gel containing ethidium bromide.

Supplementary Figure S2. Deletion of PRMT6 does not affect expression of other PRMTs.

Protein extracts were isolated from PRMT6$^{+/+}$ and PRMT6$^{-/-}$ MEFs and immunoblotted with anti-PRMT1, -PRMT3, -PRMT4/CARM1, -PRMT5, -PRMT6 and -PRMT7 antibodies or α-tubulin as a loading control.

Supplementary Figure S3. Enzymatic activity of PRMT6 is required to restore cell growth of PRMT6-null MEFs. (**A**) PRMT6$^{+/+}$ and PRMT6$^{-/-}$ early passage MEFs were infected with control (pLPC-empty), myc-PRMT6 or catalytically inactive myc-PRMT6$^{VLD:KLA}$ encoding retroviruses. Cell numbers were counted for 5 days after antibiotic selection.

(**B**) Whole cell extracts obtained from PRMT6$^{+/+}$ and PRMT6$^{-/-}$ MEFs expressing empty vector (control), myc-PRMT6 or the myc-PRMT6$^{VLD:KLA}$ were analyzed by immunoblotting using anti-PRMT6 antibodies. Endogenous PRMT6 and exogenous myc-PRMT6 are designated on the right.

Neault and al. NAR (2012)

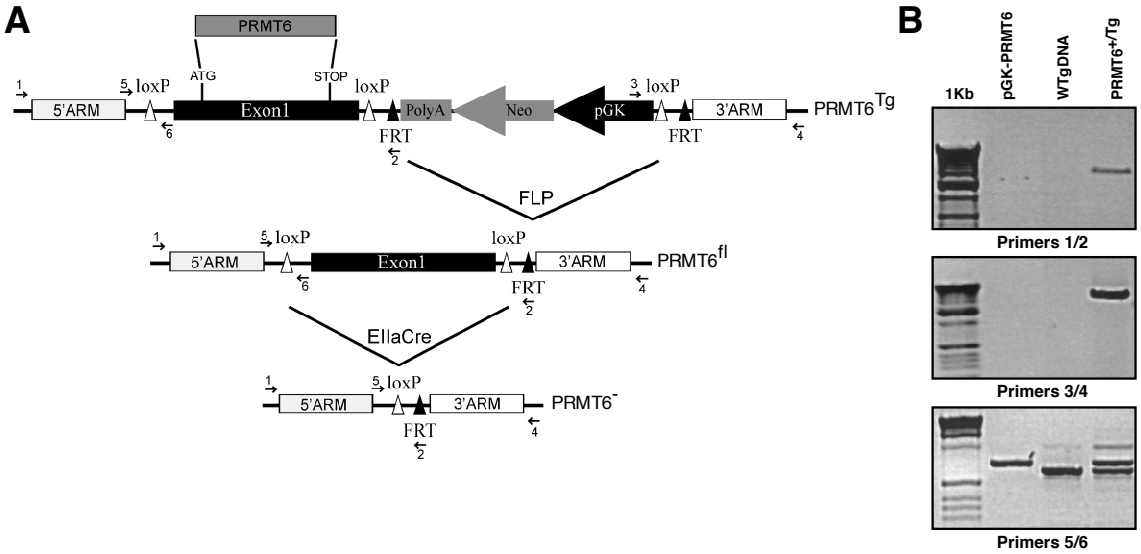

RICHARD - Supplementary Fig.S1

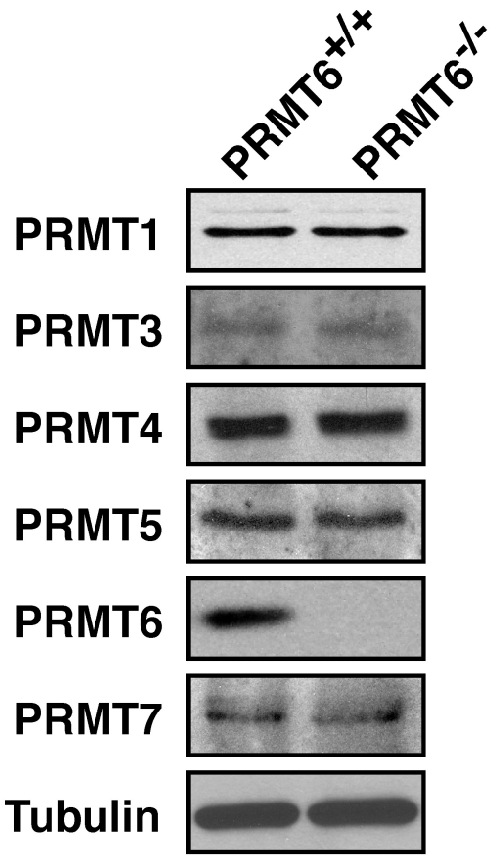

RICHARD - Supplementary Fig.S2

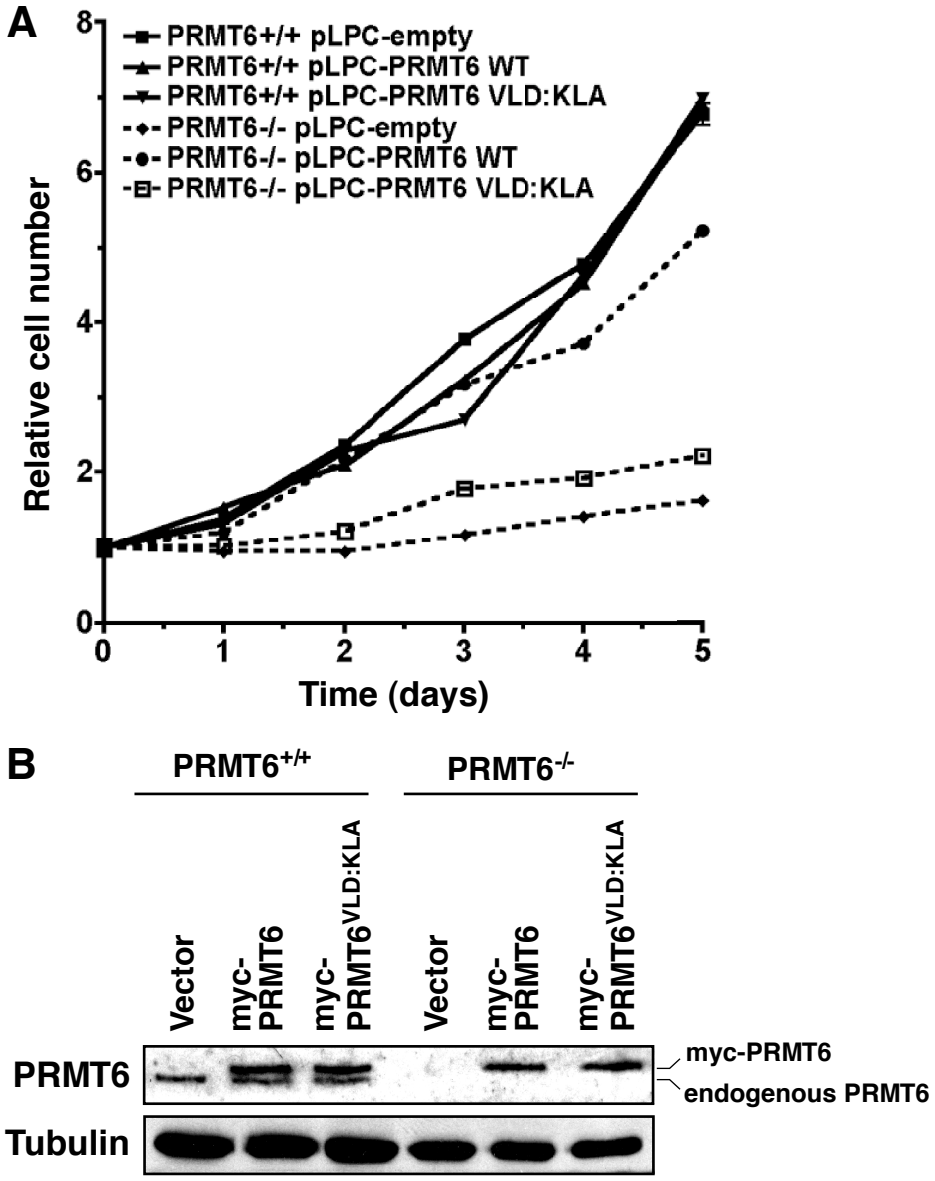

RICHARD - Supplementary Fig.S3